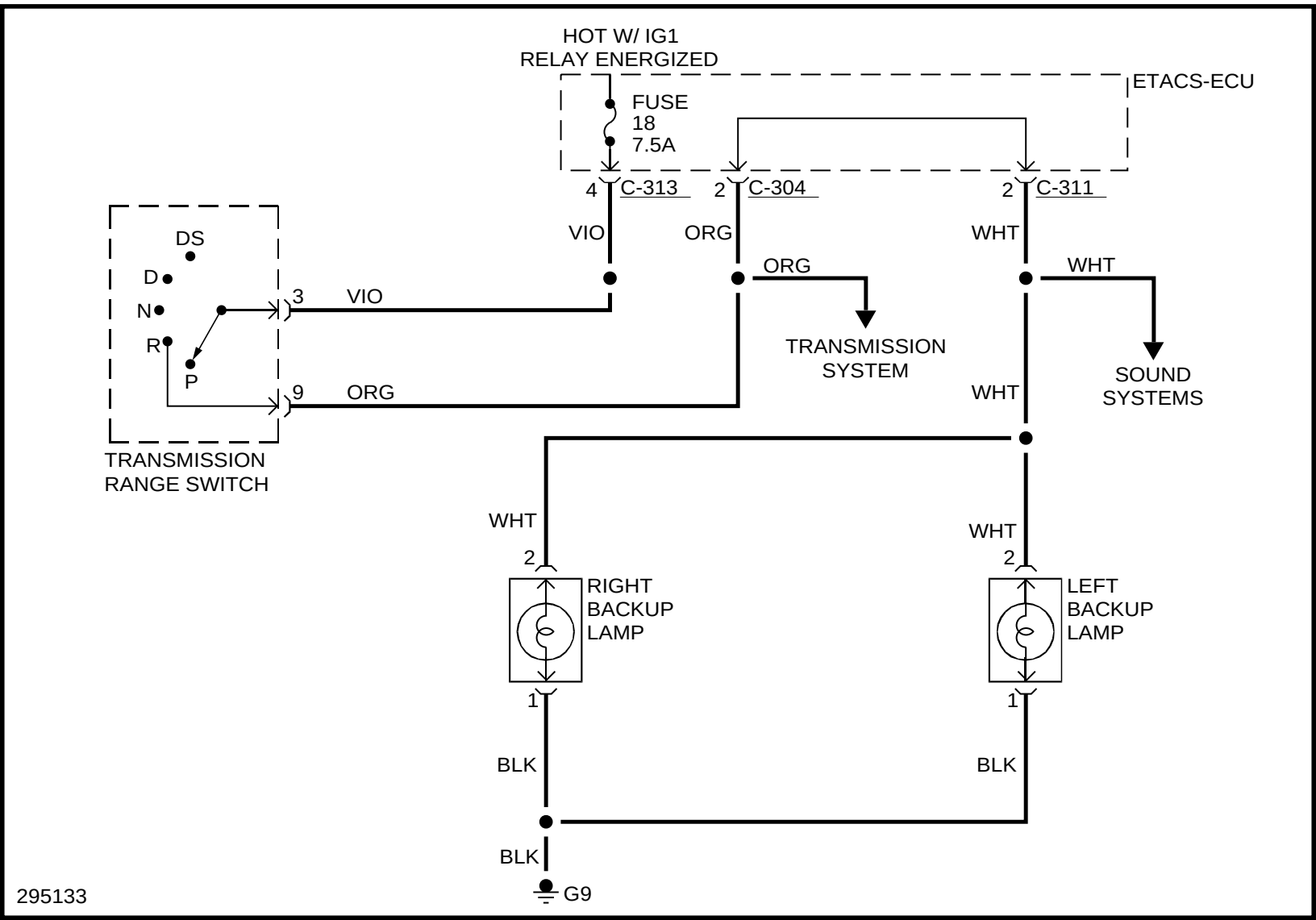
HOT W/ IG1
RELAY ENERGIZED
ETACS-ECU
FUSE
18
7.5A
4
C-313
2
C-304
2
C-311
VIO
ORG
WHT
DS
D
N
R
P
3
VIO
9
ORG
ORG
TRANSMISSION
SYSTEM
WHT
SOUND
SYSTEMS
WHT
TRANSMISSION
RANGE SWITCH
WHT
2
RIGHT
BACKUP
LAMP
1
WHT
2
LEFT
BACKUP
LAMP
1
BLK
BLK
BLK
G9
295133